Necessary preliminary tasks:

- Close front side window completely
- Disconnect battery negative lead
- Remove front door trim panel
- Remove sound insulation in front door

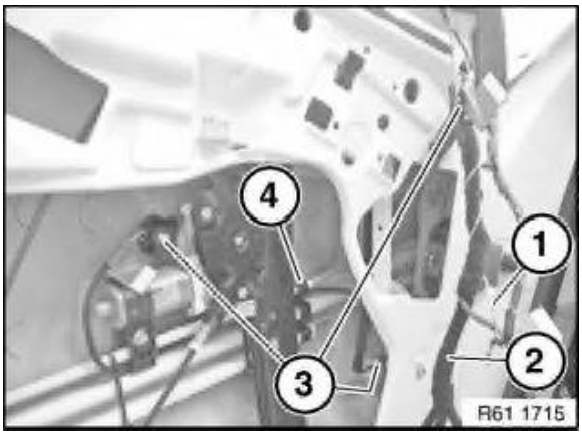

Release cable (1) from door wiring harness (2).

Disconnect plug connection (3).

Release door wiring harness (2) at point (4).

Installation:

Make sure door wiring harness (2) is correctly laid.

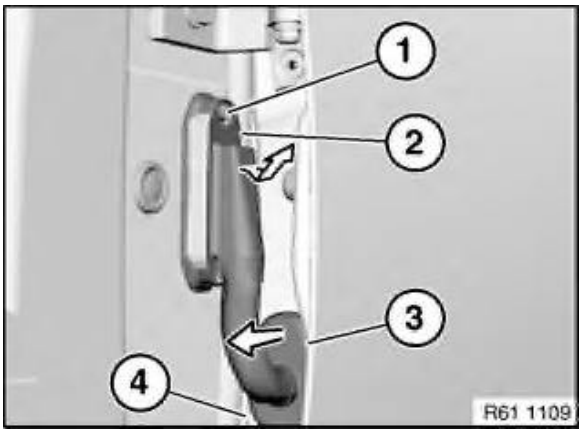

Note:

Front side panel shown removed for purposes of clarity.

Release screw (1), fold door wiring harness plug on A-pillar (2) downwards slightly and remove.

Unlock plug connection behind and disconnect.

Pull rubber grommet (3) in direction of arrow out of front door (4).

Feed out door wiring harness towards front to A-pillar and remove.

Warning!

Observe safety instructions for handling vehicle battery.

Follow instructions for disconnecting and connecting battery!

Observe notes on power supply / on intelligent battery sensor (IBS).

Necessary preliminary tasks:

- Remove battery cover or open right luggage compartment trim panel

Security version:

- Remove luggage compartment equipment carrier

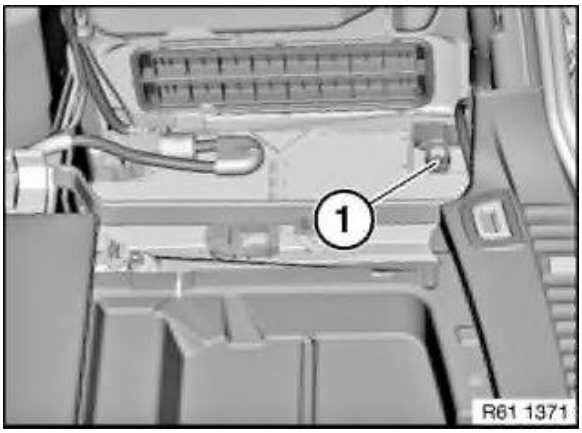

Loosen nut (1).

Tightening torque 61 21 1AZ .

Important!

Do not under any circumstances use force to pull off pole shoe.

Do not under any circumstances release socket-head cap screw of IBS.

Detach battery negative lead with IBS towards top, lay to one side and secure.

Battery acid is highly corrosive:

Do not allow any battery acid to come into contact with the eyes, the skin or clothing. Therefore wear protective clothing, gloves and goggles.

Do not tilt the battery, acid may emerge from the vent opening.

In event of contact with acid:

If acid is splashed into the eyes, rinse them immediately for several minutes with clear water. You must then consult a doctor without delay.

If acid is splashed onto the skin or clothing, neutralize it immediately with a soapy solution and rinse with lots of water.

Seek medical attention immediately if battery acid is accidentally swallowed.

Explosion hazard:

Strictly no flames, sparks, naked light or smoking!

A highly explosive mixture of electrolytic gas is created when batteries are charged. The rooms where charging is carried out must therefore always be well ventilated.

Avoid the formation of sparks when handling cables, wiring and electrical devices.

Turn the ignition lock to the 0 position before disconnecting or connecting the battery.

Do not place tools or any similar object on the battery (danger of short-circuiting and explosion!).

Observe safety instructions for handling vehicle battery.

Before disconnecting battery:

Turn off the ignition and other electrical loads/consumers to prevent sparking when reconnecting.

Note:

If the ignition is not turned off when the battery is disconnected, fault memories may be set in some control units.

Important!

- There is a danger of mixing up battery leads: If the battery positive and negative leads are the same colour and you are in doubt, follow the polarity to the battery, then mark and cover the leads.
- On vehicles with radio code: After disconnecting the battery, the radio code must be re-entered. Therefore obtain the radio code card from the customer beforehand. Note stored stations and restore them after connecting the battery.
- Stored settings of the on-board computer and clock will also be lost.
- All available central keys must be recoded for cars with first generation infrared transmitter locking systems.

General notes on disconnecting battery:

- Do not disconnect battery leads and leads from alternator and starter motor while engine is running.
- Cars with IBS on battery negative terminal:

  Do not under any circumstances pull/lever off pole shoes by force.

  Do not under any circumstances release socket-head cap screw of IBS.
- Detach terminal of battery negative lead from car battery and second battery if fitted. Cover battery negative terminal(s) and secure.
- When work is carried out on the electrical system, faults may be caused in the fault memories of some control units when the battery is connected.
- When installing battery terminal: Tightening torque 61 21 1AZ .

After connecting battery:

Important!

The scope of application of some systems may be restricted after a power supply interruption.

Likewise, individual settings may be lost.

Settings or activations must be carried out, depending on the equipment specification.

Example:

- Vehicles with automatic engine start-stop system (MSA):

  MSA function is active only after learning period (vehicle must not be woken for a period of 6 hours) > if necessary, notify customer of the situation
- E46 (AWD)/ E53/ E83: Carry out steering angle sensor adjustment
- If necessary, carry out adjustment of active front steering
- If necessary, activate sliding sunroof
- If necessary, activate power windows

- If necessary, activate mirror with compass

Please refer to the Progman user documentation for further information on vehicle-specific activation.

Vehicles with a two-battery system

Starter and equipment batteries

A two-battery system has a starter battery circuit and an equipment battery circuit. A supplementary control unit monitors both battery circuits. Depending on the situation, the battery circuits are connected to or isolated from the supplementary control unit via an isolating relay.

Two AGM batteries, whose design and properties are described in AGM batteries, are used as a storage battery.

Important!

These batteries must not under any circumstances be charged with a voltage in excess of 14.8 V. Rapid programs must not be used either.

Receiving/giving starting assistance via jump start terminal

The engine can be jump-started with an external voltage supply via the jump start terminal on the right side of the engine compartment.

Note:

The starter battery is isolated from the alternators when the engine hood/bonnet is open.

Giving starting assistance via the jump start terminal is thus limited by the capacity of the starter battery when the engine hood/bonnet is open.

Charging starter and equipment batteries via jump start terminal

The starter battery is charged as a matter of priority with a charger connected to the jump start terminal. The voltage at the starter battery is the decisive factor in determining whether the equipment battery is also included in the charging operation. The supplementary control unit automatically detects a charging operation at a charging voltage at the starter battery of ≥ 13.5 V. The isolating relay is closed and thus the equipment battery is connected in parallel. Both batteries are now charged.

Prerequisite:

- Terminal 61 inactive
- Terminal 15 inactive

If terminal 15 becomes "active" during the charging operation, the isolating relay is opened immediately and again only the starter battery is charged.

Note:

When the engine hood is open, the isolating relay is also opened in normal operation when the engine is running.

A special mode can be set by means of diagnosis for workshop/garage operation. The isolating relay is closed from terminal R in this operating mode. This mode is automatically reset once a distance of 5 km has been driven.

Trickle charging

The increased closed-circuit current consumption can be compensated for via the jump-start connection point with the aid of the "Acctiva easy" battery trickle charger (Service Information 2 03 05 205).

Important!

The cigarette lighter is isolated from the electrical system after terminal R "OFF" on a timed basis (60 mins.), thereby interrupting charging of the equipment battery via the cigarette lighter. This is prevented if the battery master

switch (on the right side of the luggage compartment behind the panel) is turned on and off again twice within 2 seconds. (Cigarette light battery charging function).

General information for service staff on power supply: E60, E61, E63, E64

Note: Do not connect a trickle-charger to the cigarette lighter.

Power is fed to the cigarette lighter from the rear power distributor via a relay. This relay is deactivated when terminal 15 is switched off. That means that a trickle-charger connected to the cigarette lighter is separated from the battery. Only recharge the battery using the external-start support point. Only then can the energy fed into the vehicle be registered.

Intelligent battery sensor

Important: Risk of irreparable damage if mechanically stressed

- Do not attach any additional connections to the negative terminal of the battery.
- Do not modify the earth cable in any way.
  The earth cable also serves to carry off heat.
- Do not create a connection between the IBS (intelligent battery sensor) and the sensor screw.
- Do not use force when disconnecting the terminal clamp from the battery terminal:
  - Do not pull on the earth cable.
  - Do not apply any tools under the IBS to lever off the terminal clamp.
- Do not use the IBS connections as a lever.
- Use a calibrated torque wrench with tightening torque set according to the Repair Instructions.
- Do not loosen or tighten the sensor screw (Torx screw).
- Prevent direct contact between the IBS and earth.

Change battery

Important: Risk of irreparable damage to the IBS and the wires when changing the battery

When the battery is replaced, the IBS (intelligent battery sensor) and the wires could be damaged beyond repair by mechanical stressing.

Please note the following when replacing the battery:

- Always proceed in accordance with the Repair Instructions.
- Avoid subjecting the integrated battery sensor to mechanical stress.

Note: When changing the battery, perform service function "Register battery renewal".

When changing the battery, use the battery size (capacity) installed in production. The battery size needed for the vehicle is encoded in the Car Access System (CAS) and in the engine electronics (DME/DDE).

- If a battery with a different capacity is fitted, the CAS must be recoded. Run "Battery" retrofit with Progman.
- Erase any fault memory entry in the engine control unit relating to the battery replacement.

Micro-power module until 09/2005

> From 09/05, MPM function is integrated into the body-gateway module (KGM)

If consumers are cut off from the vehicle electrical system by the MPM, a fault will be registered in the fault memory.
The following faults can be read off in the BMW diagnosis system:

- Fault at terminal 15
- Cutoff with information about switch-off conditions.
  The information about the switch-off conditions is stored in the info memory used for storing additional information.
- Undervoltage
- Contact fault in relay contacts

Fault at terminal 15

- If there is a different level at terminal 15, pin 14 and in the CAN message, the MPM will register a fault in the fault memory.
- The MPM cyclically monitors the relay contacts every 100 milliseconds (ms) from terminal 15 ON. If the relay contacts do not remain closed, despite the switch-on conditions being satisfied, an entry will be made in the fault memory.

Alternator

Alternators manufactured by Bosch and by Valeo are installed on 5- and 6-Series vehicles.

- Air-cooled alternator models are used.
- The alternator model used depends on the engine installed and the vehicle's equipment specification.

Necessary preliminary tasks:

- Remove luggage compartment floor trim panel.

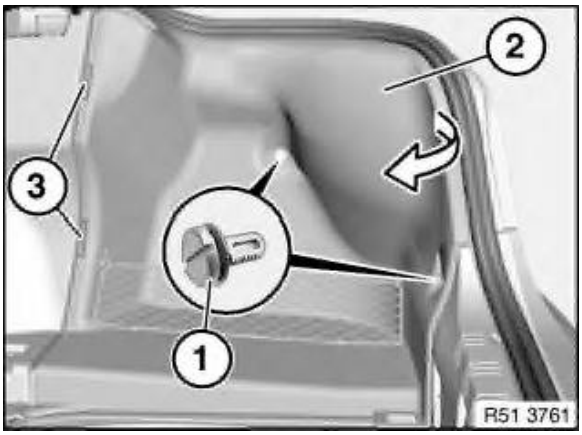

Open rotary clips (1) and remove.

Feed out luggage compartment trim on right side panel (2) in direction of arrow and remove.

Installation:

Correctly feed in guides (3) of luggage compartment trim on right side panel (2).

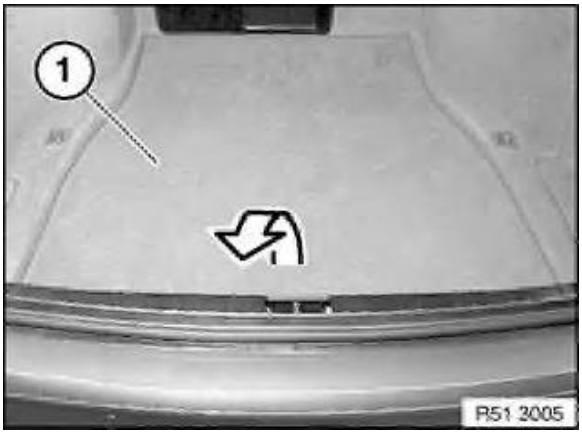

Open rear lid.

Remove luggage compartment floor trim (1).

61 21 Battery with terminal

	Type	Thread	Tightening specification	Measure
1AZ Battery positive lead, battery negative lead, safety battery terminal, IBS (screw connection from above)	E38 / E39 / E46 / E53 / E60 / E61 / E63 / E64 / E65 / E66 / E67 / E70 / E71 / E81 / E82 / E83 / E85 / E86 / E87 / E88 / E90 / E91 / E92 / E93	M6		5 Nm
	E38 / E39	M8		15 Nm
2AZ Distribution box	E60 / E61 / E63 / E64 / E70 / E71 / E81 / E82 / E87 / E88 / E90 / E91 / E92 / E93	M8		15 Nm
	E60 / E61 / E63 / E64	M6		5 Nm
3AZ Fuse box	E85 / E86	M8		15 Nm
	E85 / E86	M6		8 Nm
	E85 / E86	M5		5 Nm
4AZ Battery positive lid to distributor, safety battery terminal	E46 / E53 / E60 / E61 / E63 / E64 / E65 / E66 / E67 / E70 / E71 / E81 / E82 / E83 / E85 / E86 / E87 / E88 / E90 / E91 / E92 / E93	M8		15 Nm

61 21 Battery with terminal

	Type	Thread	Tightening specification	Measure
1AZ Battery positive lead, battery negative lead, safety battery terminal, IBS (screw connection from above)	E38 / E39 / E46 / E53 / E60 / E61 / E63 / E64 / E65 / E66 / E67 / E70 / E71 / E81 / E82 / E83 / E85 / E86 / E87 / E88 / E90 / E91 / E92 / E93	M6		5 Nm
	E38 / E39	M8		15 Nm
2AZ Distribution box	E60 / E61 / E63 / E64 / E70 / E71 / E81 / E82 / E87 / E88 / E90 / E91 / E92 / E93	M8		15 Nm
	E60 / E61 / E63 / E64	M6		5 Nm
3AZ Fuse box	E85 / E86	M8		15 Nm
	E85 / E86	M6		8 Nm
	E85 / E86	M5		5 Nm
4AZ Battery positive lid to distributor, safety battery terminal	E46 / E53 / E60 / E61 / E63 / E64 / E65 / E66 / E67 / E70 / E71 / E81 / E82 / E83 / E85 / E86 / E87 / E88 / E90 / E91 / E92 / E93	M8		15 Nm

51 41 000 Removing and installing front left or right door trim panel (long version or from 03/2007)

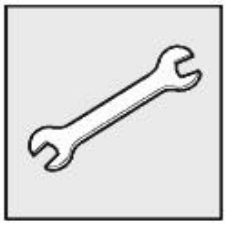

Special tools required:

- 00 9 317

Warning!

Side airbag is mounted on door trim panel:

Disconnect battery.

Important!

Do not use any sharp-edged removal tools, risk of damage to airbag.

Necessary preliminary tasks:

- Remove footwell light at bottom

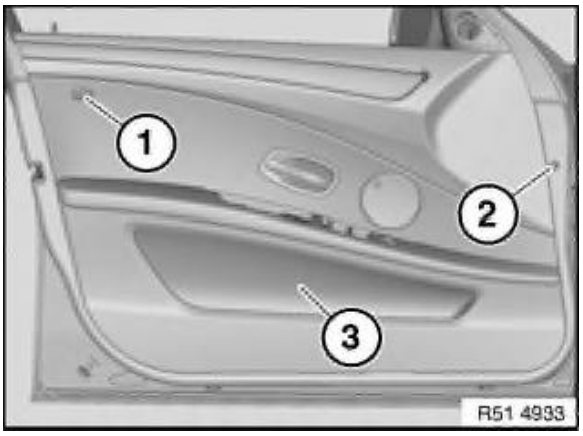

Lever out airbag emblem (1) on door trim panel (3) with special tool 00 9 317 and release screw underneath.

Tightening torque 51 41 1AZ .

Unfasten cap (2) and release screw underneath.

Installation:

Tightening torque 51 41 4AZ .

Replace cover cap (2).

Important!

Risk of damage!

Adhere without fail to the following removal sequence for unclipping the door trim panel.

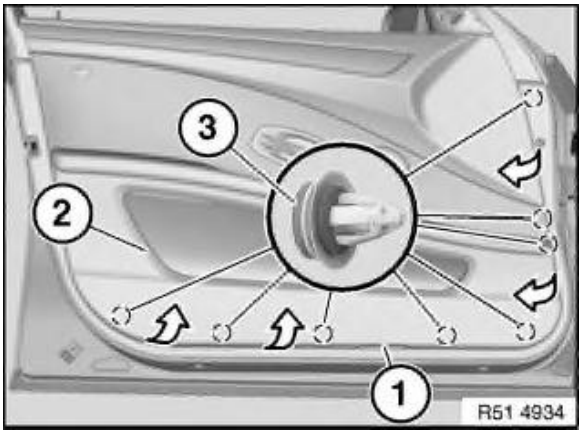

Note:

If necessary, wear gloves due to sharp edges on cutout (1).

Firmly pull on cutout (1) of footwell light and thus detach door trim panel (2) from clips (3) at bottom.

Detach door trim panel (2) in area of A-pillar from clips (3).

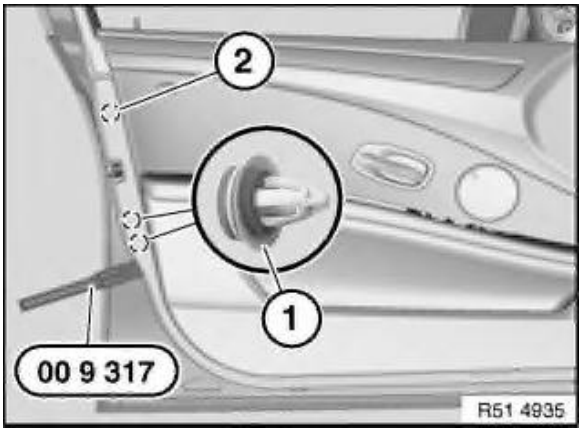

Important!

Risk of damage!

Insert special tool 00 9 317 in such a way that sound insulation is not touched.

Insert special tool 00 9 317 under clips (1) between door and door trim panel.

Press special tool 00 9 317 outwards (do not pull inwards) and thereby detach door trim panel from clips (1).

Detach door trim panel from clip (2).

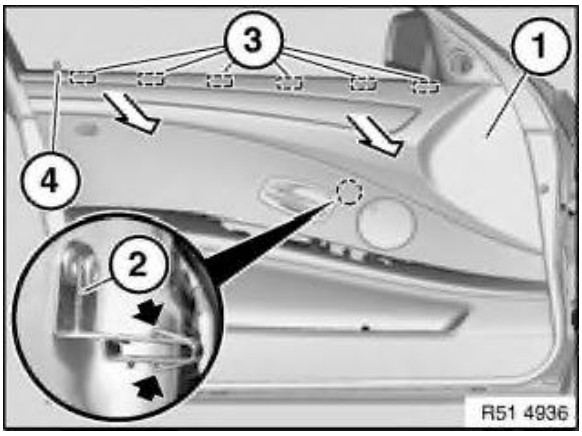

Carefully unclip door trim panel (1) at top from retainers (3).

Feed door trim panel (1) upwards out of central clip mounting (2) and release button (4).

Installation:

Release central clip from mounting (2) and attach to door trim panel.

Prior to installation, bend open retainer on inner door plate for central clip mounting (2).

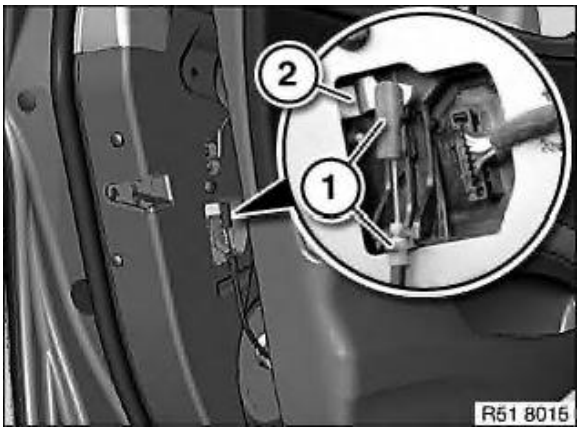

Unhook Bowden cable (1) from door lock (2).

Warning!

Disconnect plug connection on side airbag.

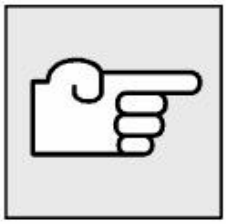

Disconnect remaining plug connections.

Remove door trim.

Installation:

Connect all plugs to original locations.

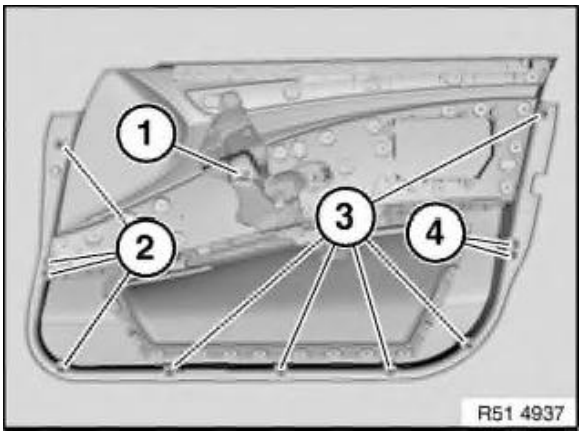

Installation:

Attach central clips (1) to door trim panel.

Replace clips (4) after each removal.

If necessary, replace faulty clips.

Make sure all clips are installed in correct position.

2 Red clip

3 White clip

4 Upper clip, blue

4 Lower clip, white

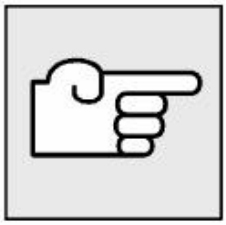

Installation:

After assembling the door trim panel proceed as follows:

- Open door window,
- lock with ignition key,
- Check for ease-of-movement on retaining button linkage,
- if necessary, align linkage.

00 9 310 Assembly wedges (set in plastic case)

Minimum set: Mechanical tools

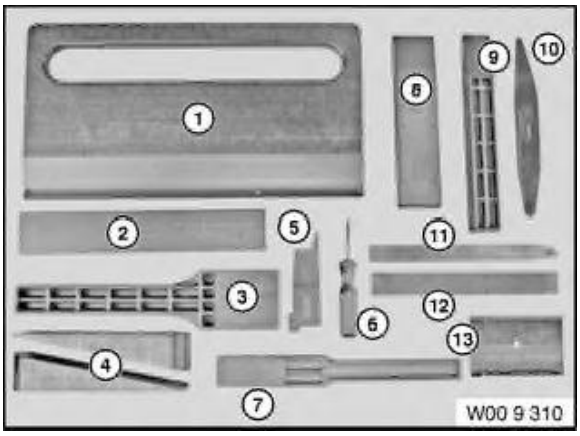

Note:	For straightening and assembly jobs on vehicle bodies, e.g. fitting trim panels, removing window weatherstrips, repairing small-scale dents, removing residual adhesive materials, measuring gap widths, levering out trim panel parts
Series:	E12, E21, E23, E24, E28, E30, E30/C, E30tou, E31, E32, E32/3, E34, E34tou, E36, E36/2, E36/3, E36/5, E36/7, E36/C, E36tou, E38, E38/3, E39, E39PL, E39tou, E46, E46/16, E46/2, E46/3, E46/5, E46/C, E52, E53, E60, E61, E63, E64, E65, E66, E67, E68, E70, E71, E81, E82, E83, E85, E86, E87, E88, E90, E91, E92, E93, R50, R52, R53, R55, R56, RR1, RR2
SI number:	1 25 05 230
Order number:	00 9 310 Assembly wedges (set in plastic case)
Consisting of:	
1 = 00 9 311	Trim remover
2 = 00 9 312	Striking wedge, square
3 = 00 9 313	Striking wedge, large
4 = 00 9 314	Adjusting wedges (2 x)
5 = 00 9 315	Gap wedge
6 = 00 9 316	Sealing lip wedge
7 = 00 9 317	Trim panel wedge
8 = 00 9 318	Universal wedge
9 = 00 9 319	Striking wedge, small
10 = 00 9 321	Fishbone
11 = 00 9 322	Plastic wedge
12 = 00 9 323	Cleaning wedge (scraper)
13 = 00 9 324	Trim remover (metal plate)
	Note: For removing stem trims from E60
14 = 00 9 329	Case with inlay for assembly wedges
	In conjunction with: 009310

63 31 020 Removing and installing/replacing footwell light

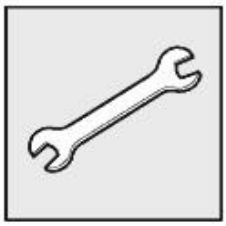

Special tools required:

- 64 1 020

Important!

Follow instructions for handling light bulbs (interior lights).

Replacement:

If necessary, remove bulb.

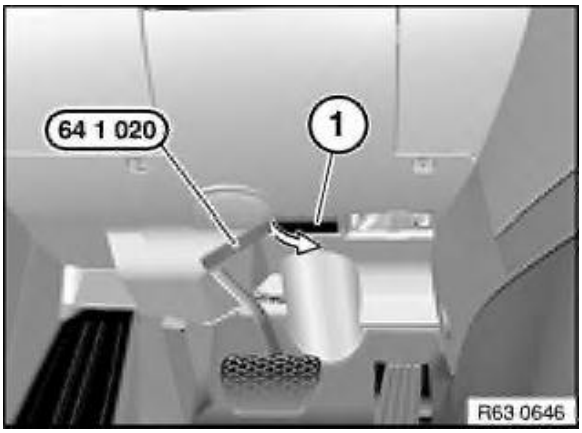

In footwell:

Lever out footwell light (1) with special tool 64 1 020 as illustrated.

Disconnect associated plug connection and remove footwell light (1).

Replacement:

Note type of bulb.

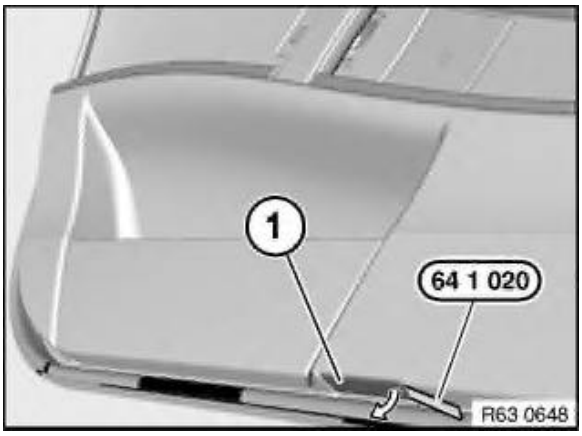

On underside of door:

Lever out footwell light (1) with special tool 64 1 020 as illustrated.

Disconnect associated plug connection and remove footwell light (1).

Replacement:

Note type of bulb.

64 1 020 Release hook

Minimum set: Mechanical tools

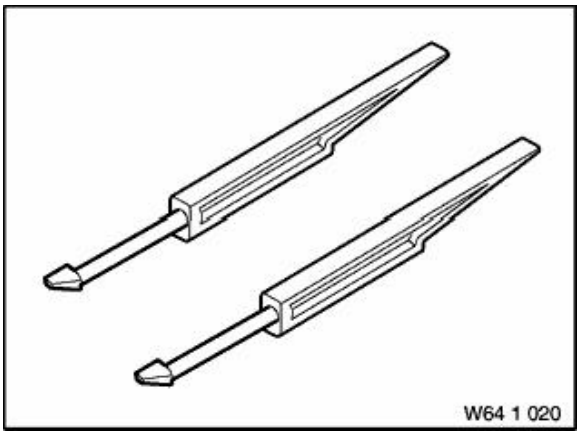

Note:	For releasing and removing fresh air grille. For removing various trims.
Series:	E36, E36/2, E36/3, E36/5, E36/7, E36/C, E36tou, E38, E38/3, E39, E39PL, E39tou, E46, E46/16, E46/2, E46/3, E46/5, E46/C, E52, E53, E60, E61, E63, E64, E65, E66, E67, E68, E70, E71, E81, E82, E83, E85, E86, E87, E88, E90, E91, E92, E93, R50, R52, R53, R55, R56, RR1, RR2
Storage location:	A3, B3
SI number:	1 15 99 (483)
Order number:	64 1 020 Release hook

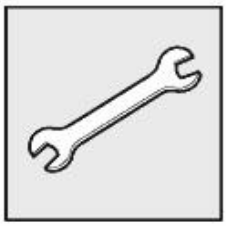

Special tools required:

- 00 9 317

Necessary preliminary tasks:

Partial removal:

- Remove front door trim panel

Complete removal up to 03/2007:

- Remove control unit for front door

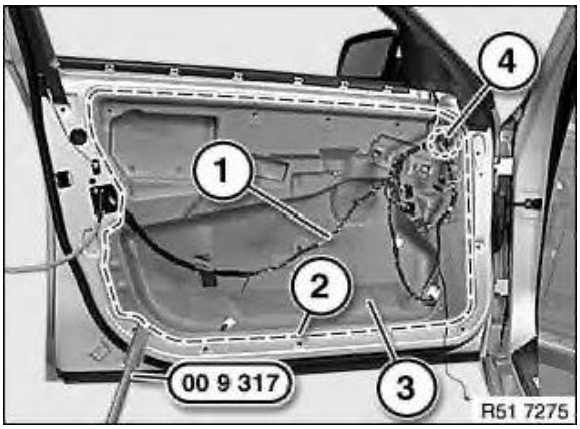

Unclip cable holders of wire (1).

Using special tool 00 9 317 , lever out sealing bead (2) of sound insulation (3) completely or if necessary partially.

Feed wires in area (4) out of sound insulation (3).

Installation:

In case of replacement or partial detachments, lay butylene tape (sourcing reference: BMW Parts Service) depending on the conditions on inner door panel or sound insulation.

Seal cable penetrations with butylene tape.

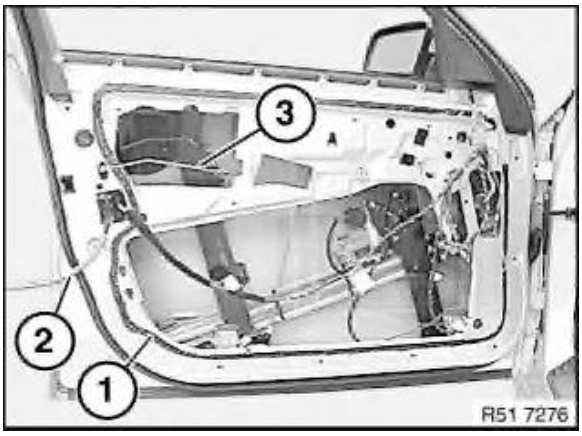

Note:

Position of butylene tape (1) on inner door plate.

Important!

Do not damage Bowden cable (2) and lock knob control rod (3).

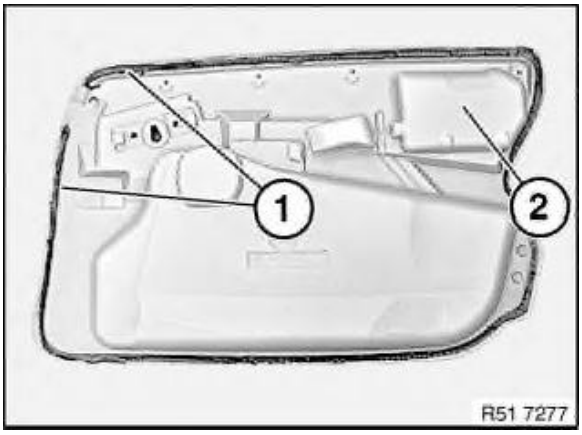

Note:

Position of butylene tape (1) on sound insulation (2).

Clean bonding area with adhesive remover (sourcing reference: BMW Parts Service).

Air drying time: 1 minute

Important!

Adhesive areas must be dry and free of dust and grease.

Once it has been cleaned, do not touch the adhesive area with bare hands.

Lay single row of 6 mm dia. butylene tape or double row of 3 mm dia. tape (sourcing reference: BMW Parts Service) in specified adhesive area.

Heat butylene tape (hot air blower) and press down firmly on sound insulation all round.

Contact pressure with hand roller: approx. 30 N/cm ^{2}

Manual contact pressure: approx. 10 N/cm^2

Note:

Firm thumb pressure has approx. 50 N/cm ^{2}

51 41 Front door trim panel with armrests

	Type	Thread	Tightening specification	Measure
1AZ Door trim panel to front door (screw under airbag sticker)	E46 / Convertible / Coupé			2.5 Nm
	E85 / E86 / E46 / Compact			4 Nm
	E60 / E61 / E65 / E66 / E67 / E83			8.0 Nm
2AZ Door trim panel to front door (screw to armrest or door handle)	E46 / Saloon / Touring			2.5 Nm
	E46 / Convertible / Coupé			3.0 Nm
	E46 / Compact			4 Nm
	E63 / E64			3.5 Nm
	E65 / E66 / E67 / E83			8.0 Nm
	E85 / E86			7.0 Nm
3AZ Armrest to door trim panel	E46 / Convertible / Coupé			2.5 Nm
4AZ Door trim panel to front door	E46 / Compact			1.1 Nm
	E60 / E61			0.8 Nm
	E65 / E66 / E67			1.5 Nm
	E63 / E64			3.0 Nm
5AZ Wood/decorative strip to door trim	E65 / E66 / E67			1.2 Nm
	E60 / E61			0.4 Nm
6AZ Speaker frame to door trim	E65 / E66 / E67			0.5 Nm
7AZ Sheet metal nut	E65 / E66 / E67			1.0 Nm
8AZ Door handle to door trim panel	E85 / E86			0.5 Nm
9AZ Carrier to door trim panel	E60 / E61			7.0 Nm

Warning!

Read and comply with safety regulations for handling airbag modules and pyrotechnical belt tensioners.

Important!

An airbag plug connection must be replaced if it is damaged.

Sourcing reference for airbag repair instructions (with plug connection), refer to BMW Parts Service.

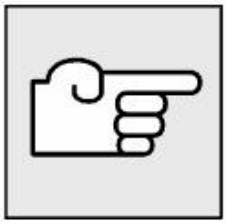

Following versions of plug connections on airbag module/gas generator are possible:

- Airbag plug connection on gas generator/airbag module is offset by 90°
- Airbag plug connection on gas generator/airbag module is straight (3 versions)

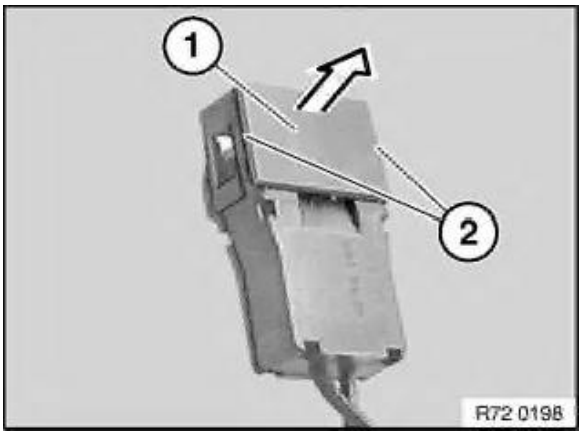

Airbag plug connection on gas generator/airbag module offset by 90° :

There are two ways of unlocking this airbag plug connection on the gas generator/airbag module:

Method 1:

Simultaneously pull cover (1) upwards at lugs on left and right (2).

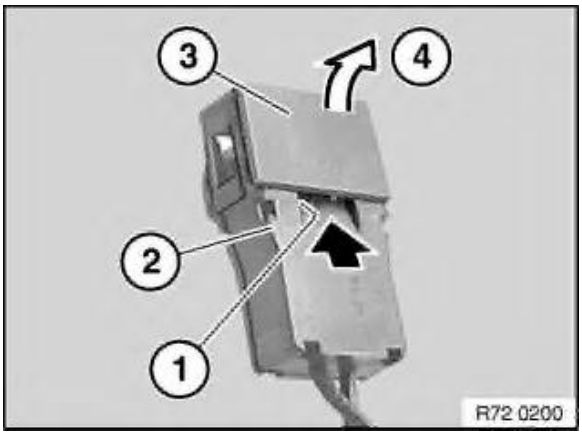

Method 2:

Insert a narrow screwdriver into recess (1) in housing (2).

Carefully prise cover (3) off (4).

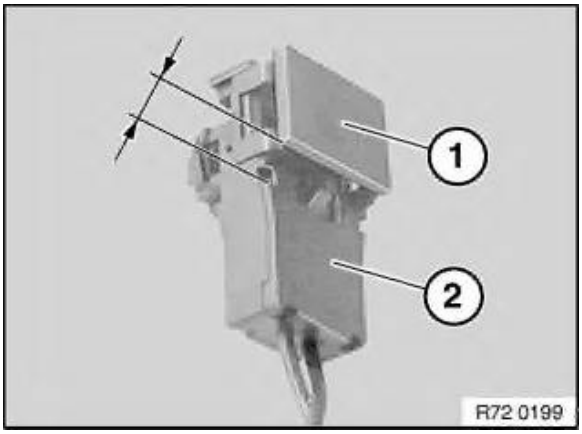

Cover (1) is not positioned higher than housing (2).

The airbag plug connection is unlocked and can now be detached from the gas generator/airbag module.

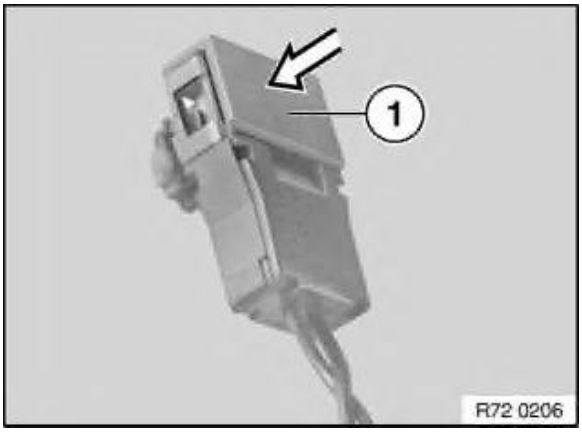

Installation:

After attaching airbag plug connection to gas generator/airbag module, press cover (1) downwards until it rests flat on housing.

Check that it catches properly.

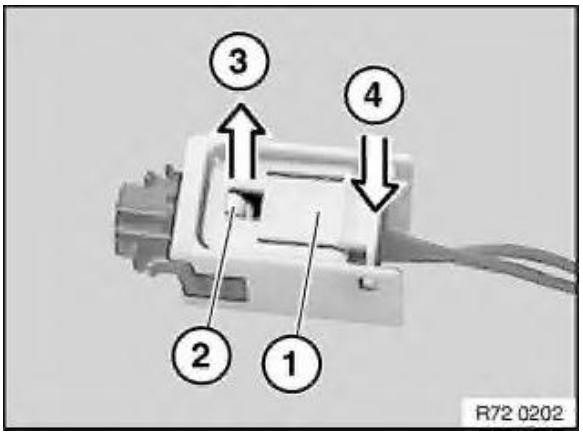

Airbag plug connection on gas generator/airbag module is straight (2 versions)

Version 1:

Press locking/unlocking plate (1) at edge (4).

Locking/unlocking plate (1) snaps upwards at opposite edge (3) and releases detent lug (2).

The airbag plug connection is unlocked and can now be detached from the gas generator/airbag module.

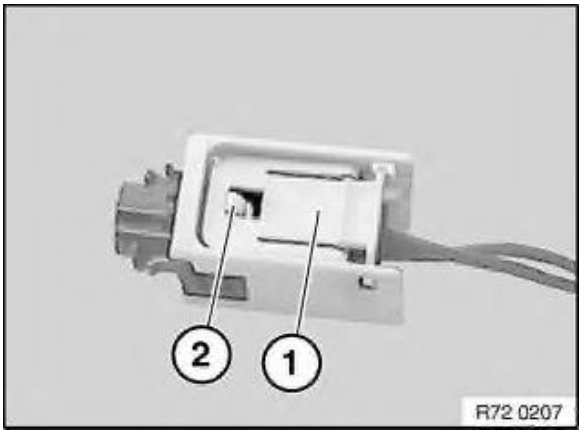

Installation:

After attaching airbag plug connection to gas generator/airbag module, check whether detent lug (2) is visible in opening of locking/unlocking plate (1).

Only if the detent lug (2) is visible will the airbag plug connection gas generator/airbag module be correctly engaged.

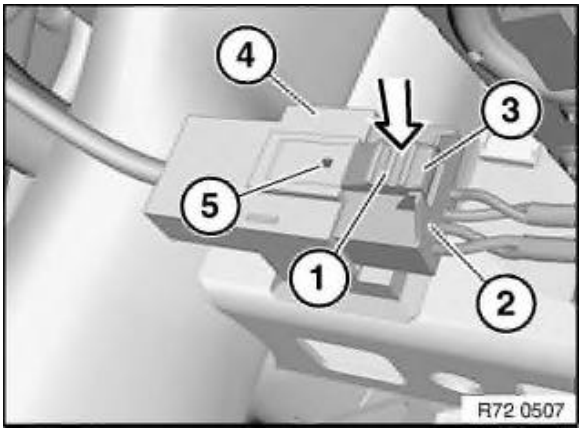

Version 2:

Press locking/unlocking plate (1) on edge (3) and pull plug (2) out of plug housing (4).

Installation:

Only if the detent lug is visible in opening (5) will the gas generator/airbag module plug connection be correctly engaged.

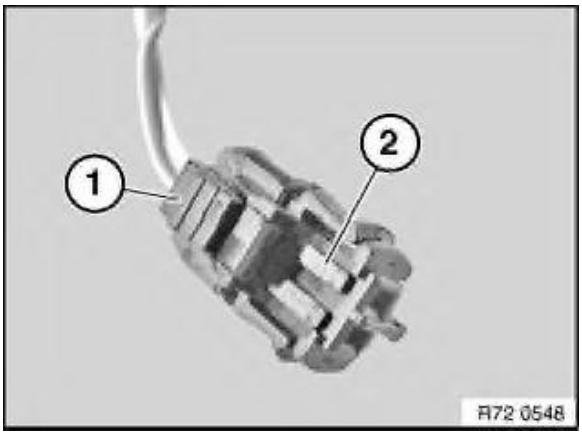

Version 3:

Press lock button (1) and pull out plug (2) up to initial engagement position.

Detach plug (2) from firing pellet.

Installation:

Insert plug connection in initial engagement position in gas generator/airbag module and engage in final engagement position.

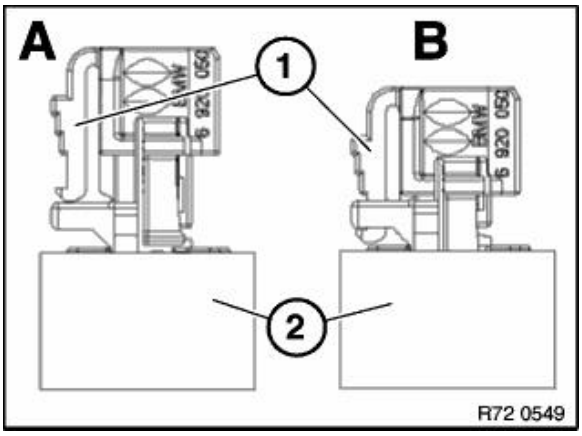

Illustration of version 3 with gas generator:

A) Initial engagement position

B) Final engagement position

1. Lock button

2. Gas generator

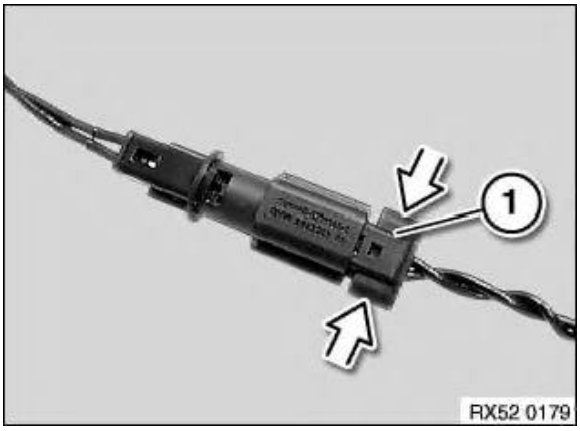

Version 4 - Crash-active head restraint:

Press locking clip at edge and disconnect plug (1).

Installation:

Check for correct engagement.

It is essential to comply with the regulations as specified in the law relating to the use of explosives when working on airbag units and seat belt tensioners.

Airbags, seat belt tensioners etc. are pyrotechnical objects. Pyrotechnical objects are assigned to different danger classes on the basis of the quantity of propellant that they contain. The assignment can be ascertained from the identification marking on the product:

Important!

Failure to comply with the warning notices and repair instructions for gas generator components can cause accidental deployment and result in injury and vehicle damage!

This applies in particular to the following components:

- Airbag modules (driver's/front passenger airbags, side airbags)
- Buckle/belt tensioner
- Head airbag (ITS, AHPS)
- Active knee protection
- Active head restraint
- Safety battery terminal (SBK)

1. Regulations

The regulations quoted in the following refer to the Federal Republic of Germany.

In all other countries, the relevant legislation and regulations must be observed in each case. Country-specific legal regulations that go beyond this information or court decisions based thereon must be followed in each case or given precedence over these regulations.

The following components used by BMW:

- Pyrotechnical restraint systems are subject to danger class PT1
- Gas generators are pyrotechnical objects belonging to danger class T1.

Handling, transporting and storing non-fired gas generators are subject to the "Explosive Materials Act" (law relating to the use of explosives dated 13/09/1976).

The relevant trade supervisory authority must be notified at least 2 weeks before pyrotechnical objects are handled for the first time. Here the relevant authority must be notified in writing of the person responsible (e.g. dealership owner, holder of general power of attorney or if necessary workshop supervisor). A certificate of qualification, i.e. specific training, is not required for the person responsible.

2. Disassembly and assembly

- Inspection, testing and installation work may only be carried out by expert trained personnel in BMW Service.
- Work on components of the airbag system should only ever be carried out with the battery disconnected, the negative terminal post covered and the plug connection of the cable leading to the gas generator disconnected. If only the battery is disconnected, the following prescribed waiting period must be observed without fail:
  - 30 minutes for vehicles up to 9/93;
  - 1 minute for vehicles from 9/93
- In the event of breaks in work, a component with a gas generator that has been removed must be secured against access by other persons.

- Individual components must never be repaired. Instead, always replace them.
- Do not treat airbag system components with cleaning agents or grease.
- Components of the airbag system must not be exposed to temperatures in excess of 75 °C.
- Airbag system components, including electronic diagnostic components, which have been dropped from heights in excess of 0.5 m must not be reinstalled in the vehicles.
- Before installing, subject airbag system components (including electronic diagnostic components) to a visual inspection for damage and replace if necessary.
- Airbag system components may only be electrically tested while they are installed and only with the BMW diagnostic system / DIS.
- **Danger of injury:** The airbag module may only be set down with the airbag itself facing upwards. Otherwise the generator will be thrown upwards if it is fired.
- Do not point the firing pellet of a gas generator at other persons.
- Components with gas generators must not be fired while they are removed. They must be disposed of by special disposal companies or returned to BMW in the packaging of the new components.
- When carrying out straightening and welding work with an electric welder:
  - Disconnect battery
  - Cover negative terminal (post)
- Avoid all contact with the skin when removing a fired airbag module - wear gloves. Wash with water after contact with the skin.

3. Transport

- Components with gas generators must be sent off in the packaging of the new components.

4. Storage

- Observe the regulations of the relevant trade supervisory authority and the applicable national regulations.

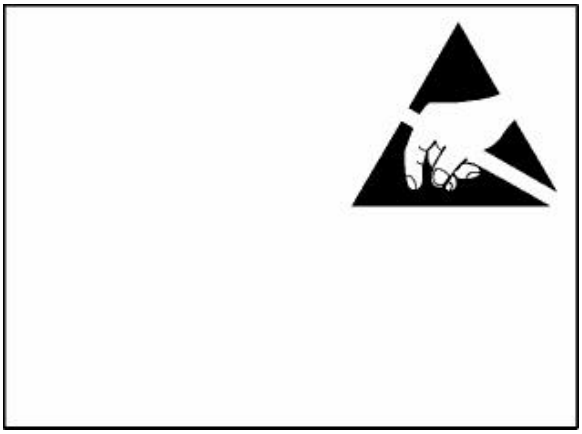

Important!

Read and comply with notes on protection against electrostatic damage (ESD protection).

Necessary preliminary tasks:

- Remove front door trim

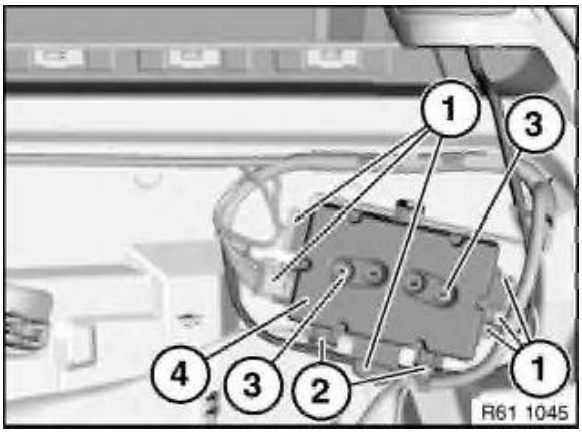

Unlock plug connections (1) and disconnect.

If necessary, unclip electrical leads at points (2).

Release screws (3).

Remove control unit in front door (4).

Replacement:

Carry out programming/coding.

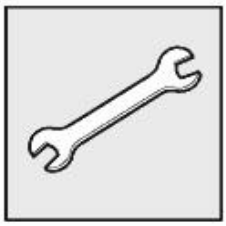

Special tools required:

- 12 7 060

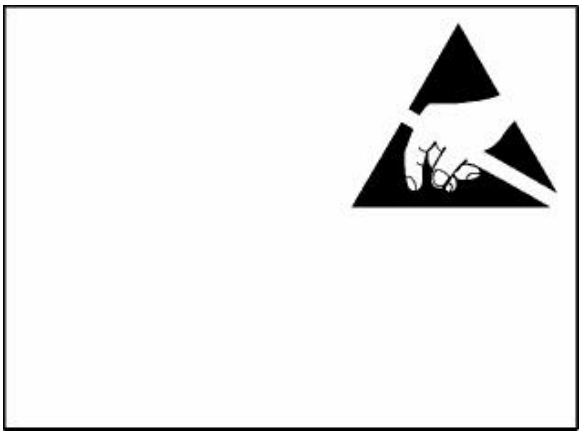

Note:

Electrical components which are particularly sensitive to electrostatic discharge (electronic control units, sensors, etc.) are marked with the ESD warning symbol.

E-Electro

S-Static

D-Discharge

Important!

Read and comply without fail with the notes on this subject from Service Information **2 06 04 128**.

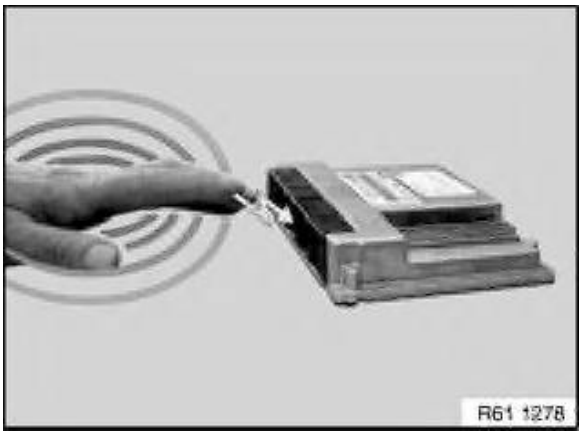

Statically charged persons can discharge by touching electrical components.

Note:

Humans can only detect a discharge starting from a level of approx. 3000 V.

The danger threshold for electrical components already starts from a level of approx. 100 V.

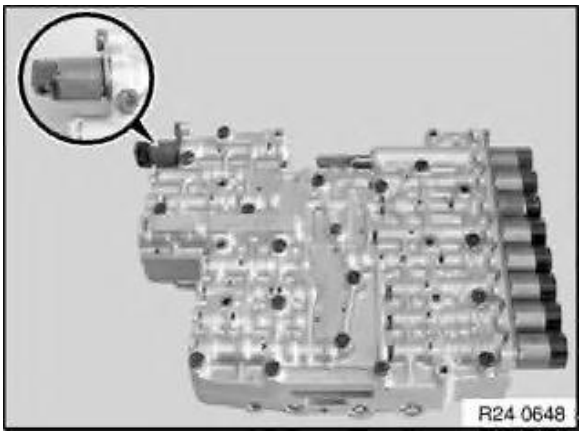

Example:

Mechatronic control unit.

Important!

Do not touch pins or multi-pin connectors directly!

Touch electrical components by their housings only.

Important!

To prevent electrical components from being damaged or destroyed by electrostatic discharge, it is absolutely essential to comply with the following instructions:

- When replacing electrical components, leave the replacement components in their original packaging until immediately before they are to be installed
- If necessary, always return a removed component in its original packaging (always pack the component away immediately)
- Read and comply with user information on using the associated special tool 12 7 060

12 7 060 Antistatic mat (ESD)

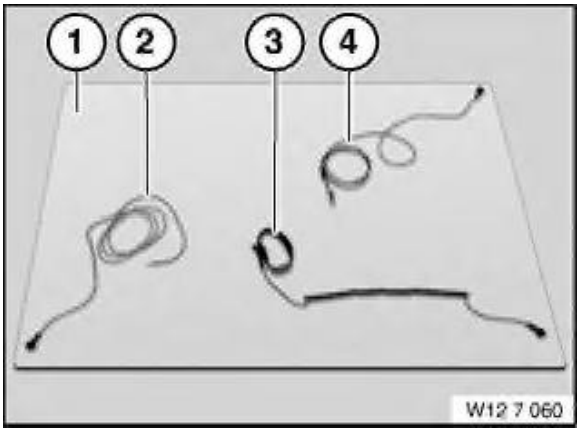

Note:	ESD (Electro Static Discharge) For protection against ESD during repairs to electronic components. (Replaces the sub-number 12 7 192 from Eprom tool kit 12 7 190)
Series:	E36, E36/2, E36/3, E36/5, E36/7, E36/C, E36tou, E38, E38/3, E39, E39PL, E39tou, E46, E46/16, E46/2, E46/3, E46/5, E46/C, E52, E53, E60, E61, E63, E64, E65, E66, E67, E68, E70, E81, E82, E83, E85, E86, E87, E90, E91, E92, E93, R50, R52, R53, R55, R56, RR1, RR2
SI number:	2 06 04 (128)
Order number:	12 7 060 Antistatic mat (ESD)